Jameco 2257723.pdf - Adobe Acrobat Reader DC

File Edit View Window Help

Home Tools Jameco 2257723.pdf ×

4 / 4 132%

Mechanical Specification

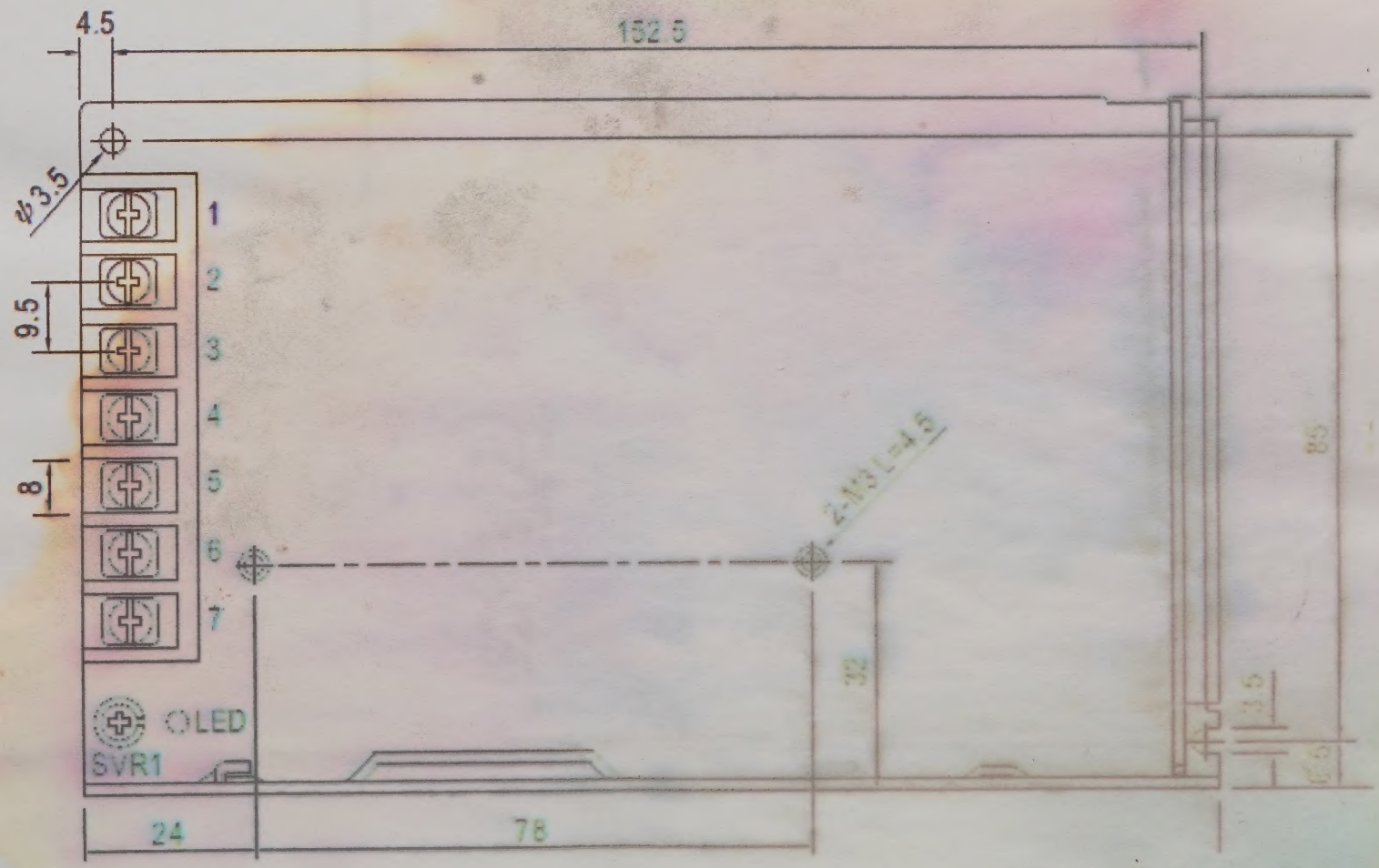

Mechanical Specification

Case No.241A Unit:mm

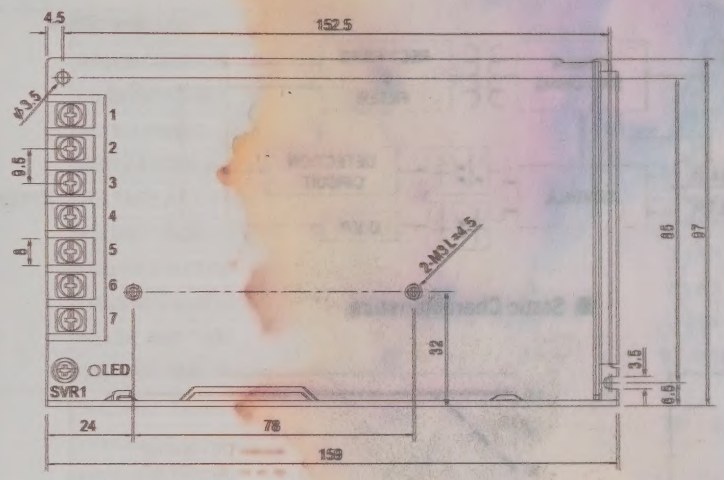

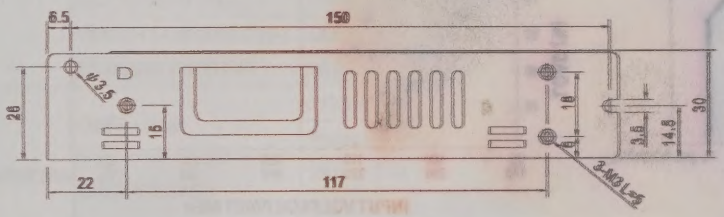

Terminal Pin No. Assignment

Pin No.	Assignment	Pin No.	Assignment
1	AC/L	4,5	DC OUTPUT -V
2	AC/N	6,7	DC OUTPUT +V
3	FG ⏚		

Installation Manual

Please refer to : http://www.meanwell.com/webnet/search/InstallationSearch.html

Block Diagram

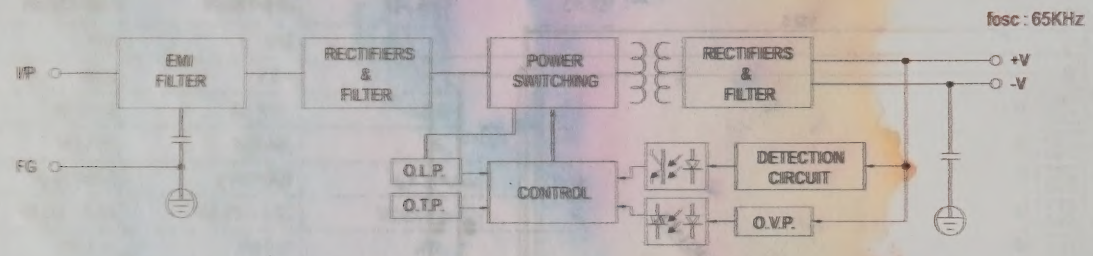

Derating Curve

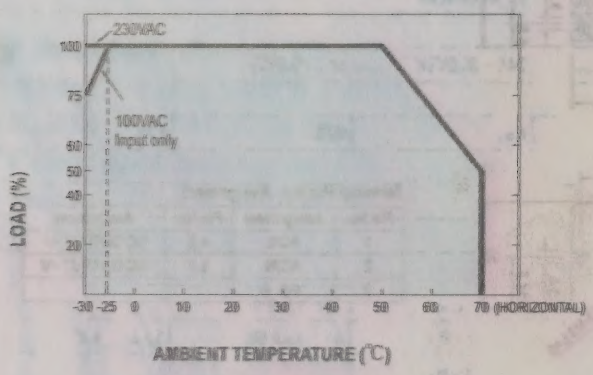

Static Characteristics

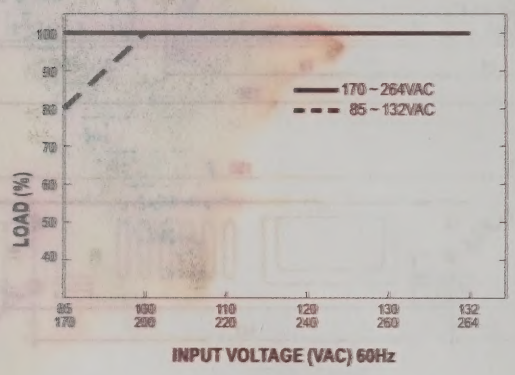

MEAN WELL

150W Single Output Switching Power Supply — LRS-150 series

SPECIFICATION

MODEL		LRS-150-12	LRS-150-15	LRS-150-24	LRS-150-36	LRS-150-48
OUTPUT	DC VOLTAGE	12V	15V	24V	36V	48V
	RATED CURRENT	12.5A	10A	6.5A	4.3A	3.3A
	CURRENT RANGE	0 ~ 12.5A	0 ~ 10A	0 ~ 6.5A	0 ~ 4.3A	0 ~ 3.3A
	RATED POWER	150W	150W	156W	154.8W	158.4W
	RIPPLE & NOISE (max.) Note.2	150mVp-p	150mVp-p	200mVp-p	200mVp-p	200mVp-p
	VOLTAGE ADJ. RANGE	10.2 ~ 13.8V	13.5 ~ 18V	21.6 ~ 28.8V	32.4 ~ 39.6V	43.2 ~ 52.8V
	VOLTAGE TOLERANCE Note.3	±1.0%	±1.0%	±1.0%	±1.0%	±1.0%
	LINE REGULATION Note.4	±0.5%	±0.5%	±0.5%	±0.5%	±0.5%
	LOAD REGULATION Note.5	±0.5%	±0.5%	±0.5%	±0.5%	±0.5%
	SETUP, RISE TIME	500ms, 30ms/230VAC 500ms,30ms/115VAC at full load				
	HOLD UP TIME (Typ.)	40ms/230VAC 35ms/115VAC at full load				
INPUT	VOLTAGE RANGE	85 ~ 132VAC / 170 ~ 264VAC by switch 240 ~ 370VDC(switch on 230VAC)				
	FREQUENCY RANGE	47 ~ 63Hz				
	EFFICIENCY (Typ.)	87.5%	88.5%	89%	89%	90%
	AC CURRENT (Typ.)	2.8A/115VAC 1.6A/230VAC				
	INRUSH CURRENT (Typ.)	COLD STAR 60A/230VAC				
	LEAKAGE CURRENT	<0.75mA / 240VAC				
PROTECTION	OVER LOAD	110 ~ 140% rated output power				
		Protection type : Hiccup mode, recovers automatically after fault condition is removed				
	OVER VOLTAGE	13.8 ~ 16.2V	18.75 ~ 21.75V	28.8 ~ 33.6V	41.4 ~ 48.6V	55.2 ~ 64.8V
		Protection type : Shut down o/p voltage, re-power on to recover				
	OVER TEMPERATURE	Shut down o/p voltage, re-power on to recover				
ENVIRONMENT	WORKING TEMP.	-30 ~ +70℃ (Refer to "Derating Curve")				
	WORKING HUMIDITY	20 ~ 90% RH non-condensing				
	STORAGE TEMP., HUMIDITY	-40 ~ +85℃, 10 ~ 95% RH				
	TEMP. COEFFICIENT	±0.03%/℃ (0 ~ 50℃)				
	VIBRATION	10 ~ 500Hz, 5G 10min./1cycle, 60min. each along X, Y, Z axes				
SAFETY & EMC (Note 7)	SAFETY STANDARDS	UL60950-1, TUV EN60950-1, EN60335-1, EN61558-1/-2-16,CCC GB4943 approved				
	WITHSTAND VOLTAGE	I/P-O/P:3.75KVAC I/P-FG:2KVAC O/P-FG:1.25KVAC				
	ISOLATION RESISTANCE	I/P-O/P, I/P-FG, O/P-FG:100M Ohms / 500VDC / 25℃/ 70% RH				
	EMC EMISSION	Compliance to EN55022 (CISPR22), GB9254 Class B, EN55014, EN61000-3-2,-3				
	EMC IMMUNITY	Compliance to EN61000-4-2,3,4,5,6,8,11, EN61000-6-2 (EN50082-2), heavy industry level, criteria A				
OTHERS	MTBF	601K hrs min. MIL-HDBK-217F (25℃)				
	DIMENSION	159*97*30mm (L*W*H)				
	PACKING	0.48Kg ; 30pcs/15.4Kg/0.75CUFT				

NOTE

1. All parameters NOT specially mentioned are measured at 230VAC input, rated load and 25℃ of ambient temperature.
2. Ripple & noise are measured at 20MHz of bandwidth by using a 12" twisted pair-wire terminated with a 0.1uf & 47uf parallel capacitor.
3. Tolerance : includes set up tolerance, line regulation and load regulation.
4. Line regulation is measured from low line to high line at rated load.
5. Load regulation is measured from 0% to 100% rated load.
6. Length of set up time is measured at cold first start. Turning ON/OFF the power supply very quickly may lead to increase of the set up time.
7. The power supply is considered a component which will be installed into a final equipment. The final equipment must be re-confirmed that it still meets EMC directives. For guidance on how to perform these EMC tests, please refer to "EMI testing of component power supplies." (as available on http://www.meanwell.com)
8. The ambient temperature derating of 5℃/1000m is needed for operating altitude greater than 2000m (6500ft).

150W Single Output Switching Power Supply

LRS-150 series

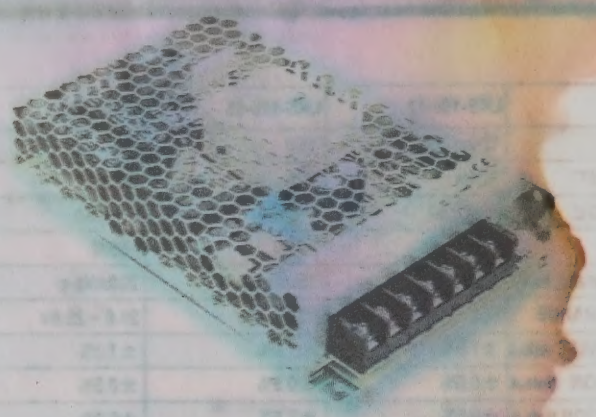

Features

- AC input range selectable by switch
- Withstand 300VAC surge input for 5 second
- No load power consumption<0.5W
- Miniature size and 1U low profile
- High operating temperature up to 70℃
- Protections: Short circuit / Overload / Over voltage / Over temperature
- Cooling by free air convection
- Compliance to IEC/EN 60335-1(PD3) and IEC/EN61558-1, 2-16 for household appliances
- Operating altitude up to 5000 meters
- Withstand 5G vibration test
- High efficiency, long life and high reliability
- LED indicator for power on
- 100% full load burn-in test
- 3 years warranty

Applications

- Industrial automation machinery
- Industrial control system
- Mechanical and electrical equipment
- Electronic instruments, equipments or apparatus
- Household appliances

Description

LRS-150 series is a 150W signal-output enclosed type power supply with 30mm of low profile design. Adopting the input of 115VAC or 230VAC(selectable by switch), the entire series provides an output voltage line of 12V, 15V, 24V, 36V and 48V.

In addition to the high efficiency up to 90%, the design of metallic mesh case enhances the heat dissipation of LRS-150 that the whole series operates from -30℃ through 70℃ under air convection without a fan. Delivering an extremely low no load power consumption (less than 0.5W), it allows the end system to easily meet the worldwide energy requirement. LRS-150 has the complete protection functions and 5G anti-vibration capability; it is complied with the international safety regulations such as TUV EN60950-1, EN60335-1,EN61558-1/-2-16, UL60950-1 and GB4943. LRS-150 series serves as a high price-to-performance power supply solution for various industrial applications.

Model Encoding

LRS -150 - 12

- 12 — Output voltage
- 150 — Output wattage
- LRS — Series name

Tell your friends about your purchase!

Share Tweet Share

4 Items

Show Details

$51.92

Barrier Blocks Series 140

.375 Density, 5-40 x 3/16" BH Screw, Open Bottom, Double Row

Electrical Characteristics

Voltage Rating: 250 VAC RMS maximum
Current Rating: 15 Amps maximum
Maximum Watts Per Terminal: 3750

Mechanical Characteristics

Maximum Wire Size: #16 AWG
Recommended Tightening Torque: 9 lb.-in.

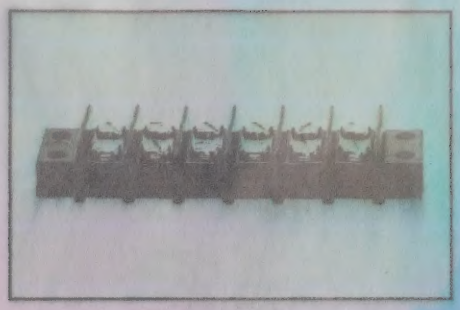

Dimensions

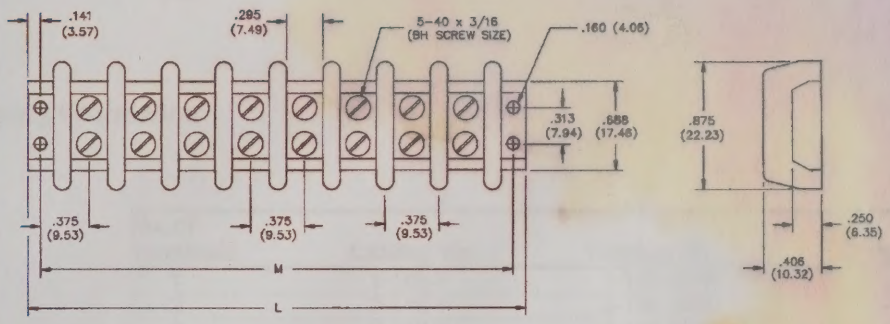

Ordering Information

No. of Terminals	Standard Screw Catalog No.	"M" Dim.	"L" Dim.
1	1-140	.750	1.032
2	2-140	1.125	1.407
3	3-140	1.500	1.782
4	4-140	1.875	2.157
5	5-140	2.250	2.532
6	6-140	2.625	2.907
7	7-140	3.000	3.282
8	8-140	3.375	3.657
9	9-140	3.750	4.032
10	10-140	4.125	4.407
11	11-140	4.500	4.782
12	12-140	4.875	5.157
13	13-140	5.250	5.532
14	14-140	5.625	5.907
15	15-140	6.000	6.282
16	16-140	6.375	6.657
17	17-140	6.750	7.032
18	18-140	7.125	7.407
19	19-140	7.500	7.782
20	20-140	7.875	8.157
21	21-140	8.250	8.532
22	22-140	8.625	8.907
23	23-140	9.000	9.282
24	24-140	9.375	9.657
25	25-140	9.750	10.032

Barrier Blocks
Series 140

.375 Density, 5-40 & 3/8 6-32 Bit Screw, Open Bottom, Double Row

Electrical Characteristics

Voltage Rating: 250 VAC RMS maximum
Current Rating: 15 Amps maximum
Maximum Watts Per Terminal: 2750

Mechanical Characteristics

Maximum Wire Size: #16 AWG
Recommended Tightening Torque: 9 lb.-in.

Dimensions

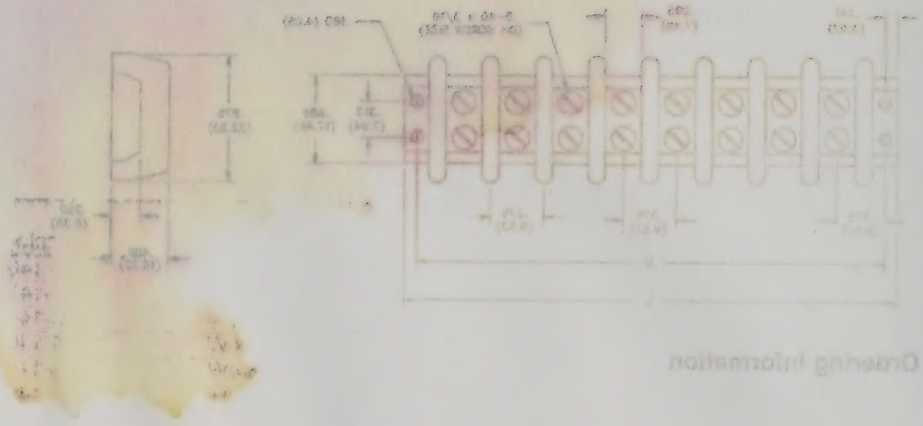

Ordering Information

No. of Terminals	Standard Screw Catalog No.	"M" Dim.	"L" Dim.
1	1-140	.750	1.032
2	2-140	1.125	1.407
3	3-140	1.500	1.782
4	4-140	1.875	2.157
5	5-140	2.250	2.532
6	6-140	2.625	2.907
7	7-140	3.000	3.282
8	8-140	3.375	3.657
9	9-140	3.750	4.032
10	10-140	4.125	4.407
11	11-140	4.500	4.782
12	12-140	4.875	5.157
13	13-140	5.250	5.532
14	14-140	5.625	5.907
15	15-140	6.000	6.282
16	16-140	6.375	6.657
17	17-140	6.750	7.032
18	18-140	7.125	7.407
19	19-140	7.500	7.782
20	20-140	7.875	8.157
21	21-140	8.250	8.532
22	22-140	8.625	8.907
23	23-140	9.000	9.282
24	24-140	9.375	9.657
25	25-140	9.750	10.032

Solder Terminal Options

Dimensions

"Y" Terminals

"3/4W" Terminals

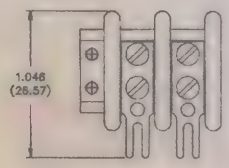

"W" Terminals

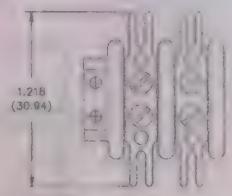

Ordering Information

No. of Terminals	Catalog No.	Catalog No.	Catalog No.
1	1-140-Y	1-140-3/4W	1-140-W
2	2-140-Y	2-140-3/4W	2-140-W
3	3-140-Y	3-140-3/4W	3-140-W
4	4-140-Y	4-140-3/4W	4-140-W
5	5-140-Y	5-140-3/4W	5-140-W
6	6-140-Y	6-140-3/4W	6-140-W
7	7-140-Y	7-140-3/4W	7-140-W
8	8-140-Y	8-140-3/4W	8-140-W
9	9-140-Y	9-140-3/4W	9-140-W
10	10-140-Y	10-140-3/4W	10-140-W
11	11-140-Y	11-140-3/4W	11-140-W
12	12-140-Y	12-140-3/4W	12-140-W
13	13-140-Y	13-140-3/4W	13-140-W
14	14-140-Y	14-140-3/4W	14-140-W
15	15-140-Y	15-140-3/4W	15-140-W
16	16-140-Y	16-140-3/4W	16-140-W
17	17-140-Y	17-140-3/4W	17-140-W
18	18-140-Y	18-140-3/4W	18-140-W
19	19-140-Y	19-140-3/4W	19-140-W
20	20-140-Y	20-140-3/4W	20-140-W
21	21-140-Y	21-140-3/4W	21-140-W
22	22-140-Y	22-140-3/4W	22-140-W
23	23-140-Y	23-140-3/4W	23-140-W
24	24-140-Y	24-140-3/4W	24-140-W
25	25-140-Y	25-140-3/4W	25-140-W

Solder Terminals can be ordered separately.

Terminal Type	Catalog No.
"Y"	Y-140
"3/4W"	3/4W-140
"W"	W-140

Marketed exclusively through distribution.

Call Toll Free: 1 (800) 323-9612

38770

REF. -50 OPT. SCREW
(WHERE APPLICABLE)

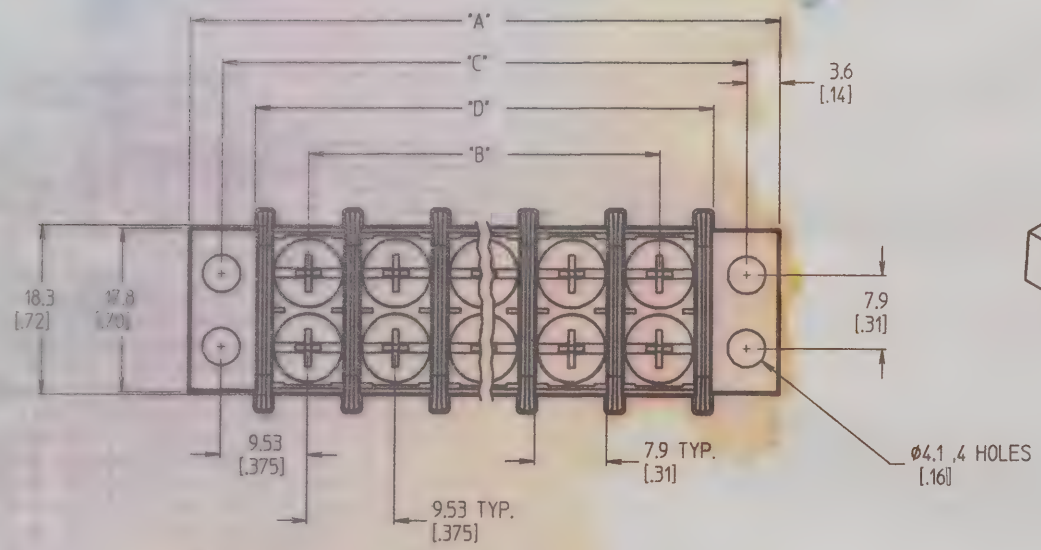

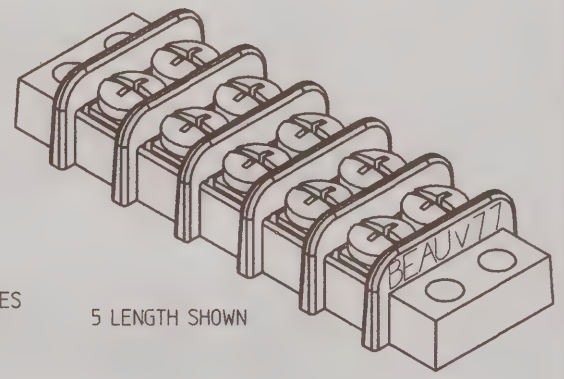

5 LENGTH SHOWN

NOTES:

1. MATERIAL: SEE TABLE
2. FINISHES: SEE TABLE
3. INCH DIMS ARE SHOWN IN BRACKETS [XXX]
4. "XX" REFERS TO THE QUANTITY OF CIRCUITS.
5. -61 OPTION: ONE ROW OF SCREWS NOT SUPPLIED. SCREW QUANTITY = "XX".
6. -49 OPTION: USE ITEM 3 TERMINAL PLATE. ALL OTHERS USE ITEM 2.
7. -58 OPTION: NO SCREWS SUPPLIED. (B)
8. FOR IMPRINTING (-10A OPTION) SEE SD-38120-001.
9. ALL COMPONENTS ARE ROHS COMPLIANT.

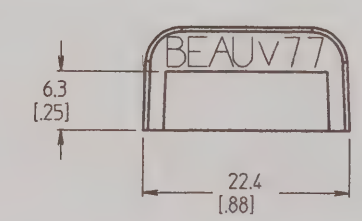

ITEM	QTY.	DESCRIPTION	MATERIAL NO.	ENGINEERING NO.
6	XX*2	SCREW&WASHER, #6-32X.250, PAN, PHIL-SLOT (-50)	STEEL	ZINC W/CHROMATE
5	XX*2	SCREW, #6-32X.250, BHD, PHIL-SLOT (-49)	BRASS	NICKEL PLATE
4	XX*2	SCREW, #6-32X.250, BHD, PHIL-SLOT (STD &-61)	STEEL	ZINC W/CHROMATE
3	XX	TERMINAL PLATE, TIN PLATED (SEE NOTE 6)	BRASS	TIN PLATE
2	XX	TERMINAL PLATE, NICKEL PLATED	BRASS	NICKEL PLATE
1	1	INSULATOR	PBT	BLACK

REMOVE -45 PARTS, ADD -10A
EC NO: IPG2014-1260
DRWN: JENCINAS 2013/10/14
CH'KD: JMACNEIL 2014/02/07
APPR: JMACNEIL 2014/03/10
DESCRIPTION
REV B

QUALITY SYMBOLS
▼=0
Ⓒ=0

GENERAL TOLERANCES (UNLESS SPECIFIED)

	mm	INCH
4 PLACES	± ---	± ---
3 PLACES	± ---	± .005
2 PLACES	± 0.13	± .01
1 PLACE	± 0.3	± ---
ANGULAR ± 2 °		

DRAFT WHERE APPLICABLE MUST REMAIN WITHIN DIMENSIONS

DIMENSION STYLE: MM/IN
SCALE: 2:1
DESIGN UNITS: INCH
THIRD ANGLE PROJECTION

DRAWN BY: C. YORK DATE: 2006/08/11
CHECKED BY: J. MACNEIL DATE: 2006/08/11
APPROVED BY: R. DEROSS DATE: 2006/08/11

TITLE: 9.53 [.375] DOUBLE ROW LOW PROFILE BTS ASSY

MOLEX INCORPORATED

MATERIAL NO.: SEE SHT. 2
DOCUMENT NO.: SD-38770-004
SHEET NO.: 1 OF 2
SIZE: B

THIS DRAWING CONTAINS INFORMATION THAT IS PROPRIETARY TO MOLEX INCORPORATED AND SHOULD NOT BE USED WITHOUT WRITTEN PERMISSION

tb_frame_B_P_ME_T
Rev. D 2004/04/02

38770

No. of Circuits	DIM. "A" mm	DIM. "A" in	DIM. "B" mm	DIM. "B" in	DIM. "C" mm	DIM. "C" in	DIM. "D" mm	DIM. "D" in	ASSEMBLY MATERIAL NO. (STANDARD)	ASSEMBLY MATERIAL NO. (-49 OPTION)	ASSEMBLY MATERIAL NO. (-50 OPTION)	ASSEMBLY MATERIAL NO. (-58 OPTION)	ASSEMBLY MATERIAL NO. (-10A OPTION)	ASSEMBLY MATERIAL NO. (-61 OPTION)
[illegible]	[illegible]	1.40	[illegible]	[illegible]	28.58	1.125	21.3	0.84	38770-0102	38770-0202	38770-0302	38770-0402	38770-0502	38770-0602
[illegible]	[illegible]	1.75	19.05	0.750	38.10	1.500	30.8	1.21	38770-0103	38770-0203	38770-0303	38770-0403	38770-0503	38770-0603
[illegible]	[illegible]	2.10	[illegible]	1.125	47.63	1.875	40.3	1.59	38770-0104	38770-0204	38770-0304	38770-0404	38770-0504	38770-0604
[illegible]	[illegible]	2.45	38.10	1.500	57.15	2.250	49.8	1.96	38770-0105	38770-0205	38770-0305	38770-0405	38770-0505	38770-0605
[illegible]	[illegible]	2.91	47.63	1.875	66.68	2.625	59.4	2.34	38770-0106	38770-0206	38770-0306	38770-0406	38770-0506	38770-0606
[illegible]	[illegible]	3.28	57.15	2.250	76.20	3.000	68.9	2.71	38770-0107	38770-0207	38770-0307	38770-0407	38770-0507	38770-0607
[illegible]	[illegible]	3.66	66.68	2.625	85.73	3.375	78.4	3.09	38770-0108	38770-0208	38770-0308	38770-0408	38770-0508	38770-0608
09	[illegible]	4.03	76.20	3.000	95.25	3.750	87.9	3.46	38770-0109	38770-0209	38770-0309	38770-0409	38770-0509	38770-0609
[illegible]	[illegible]	[illegible]	[illegible]	3.375	104.78	4.125	97.5	3.84	38770-0110	38770-0210	38770-0310	38770-0410	38770-0510	38770-0610
11	[illegible]	4.78	[illegible]	3.750	114.30	4.500	107.0	4.21	38770-0111	38770-0211	38770-0311	38770-0411	38770-0511	38770-0611
12	[illegible]	5.16	104.78	4.125	123.83	4.875	116.5	4.59	38770-0112	38770-0212	38770-0312	38770-0412	38770-0512	38770-0612
13	140.[illegible]	[illegible]	[illegible]	4.500	133.35	5.250	126.0	4.96	38770-0113	38770-0213	38770-0313	38770-0413	38770-0513	38770-0613
14	15[illegible]	5.91	123.83	4.875	142.88	5.625	135.6	5.34	38770-0114	38770-0214	38770-0314	38770-0414	38770-0514	38770-0614
[illegible]	15[illegible]	6.28	[illegible]	5.250	152.40	6.000	145.1	5.71	38770-0115	38770-0215	38770-0315	38770-0415	38770-0515	38770-0615
16	169.[illegible]	6.66	142.88	5.625	161.93	6.375	154.6	6.09	38770-0116	38770-0216	38770-0316	38770-0416	38770-0516	38770-0616
17	178.6	7.03	152.40	6.000	171.45	6.750	164.1	6.46	38770-0117	38770-0217	38770-0317	38770-0417	38770-0517	38770-0617
18	188.1	7.41	161.93	6.375	180.89	7.125	173.7	6.84	38770-0118	38770-0218	38770-0318	38770-0418	38770-0518	38770-0618
19	197.6	7.78	171.45	6.750	190.50	7.500	183.2	7.21	38770-0119	38770-0219	38770-0319	38770-0419	38770-0519	38770-0619
20	207.1	8.16	180.89	7.125	200.03	7.875	192.7	7.59	38770-0120	38770-0220	38770-0320	38770-0420	38770-0520	38770-0620
21	216.7	8.53	190.50	7.500	209.55	8.250	202.2	7.96	38770-0121	38770-0221	38770-0321	38770-0421	38770-0521	38770-0621
22	226.2	8.91	200.03	7.875	219.08	8.625	211.8	8.34	38770-0122	38770-0222	38770-0322	38770-0422	38770-0522	38770-0622
23	235.7	9.28	209.55	8.250	228.60	9.000	221.3	8.71	38770-0123	38770-0223	38770-0323	38770-0423	38770-0523	38770-0623
24	245.2	9.66	219.08	8.625	238.13	9.375	230.8	9.09	38770-0124	38770-0224	38770-0324	38770-0424	38770-0524	38770-0624
25	254.8	10.03	228.60	9.000	247.65	9.750	240.3	9.46	38770-0125	38770-0225	38770-0325	38770-0425	38770-0525	38770-0625
26	264.3	10.41	238.13	9.375	257.18	10.125	249.9	9.84	38770-0126	38770-0226	38770-0326	38770-0426	38770-0526	38770-0626
27	273.8	10.78	427.65	9.750	266.70	10.500	259.4	10.21	38770-0127	38770-0227	38770-0327	38770-0427	38770-0527	38770-0627
28	283.3	11.16	257.18	10.125	276.23	10.875	268.9	10.59	38770-0128	38770-0228	38770-0328	38770-0428	38770-0528	38770-0628
29	292.9	11.53	266.70	10.500	285.75	11.250	278.4	10.96	38770-0129	38770-0229	38770-0329	38770-0429	38770-0529	38770-0629
30	302.4	11.91	276.23	10.875	295.28	11.625	288.0	11.34	38770-0130	38770-0230	38770-0330	38770-0430	38770-0530	38770-0630

SEE SHEET 1
EC NO: IPG2014-1260
DRWN: JENC1NAS 2013/10/14
CH'KD: JMACNEIL 2014/02/07
APPR: JMACNEIL 2014/03/10
DESCRIPTION
B
REV

QUALITY SYMBOLS
▼=0
(C)=0

GENERAL TOLERANCES (UNLESS SPECIFIED)

	mm	INCH
4 PLACES	± ---	± ---
3 PLACES	± ---	± .005
2 PLACES	± 0.13	± .01
1 PLACE	± 0.3	± ---
ANGULAR ± 2 °		

DRAFT WHERE APPLICABLE MUST REMAIN WITHIN DIMENSIONS

DIMENSION STYLE: MM/IN
SCALE: 2:1
DESIGN UNITS: INCH
THIRD ANGLE PROJECTION

DRAWN BY: C. YORK DATE: 2006/08/11
CHECKED BY: J. MACNEIL DATE: 2006/08/11
APPROVED BY: R. DEROSS DATE: 2006/08/11

TITLE: 9.53 [.375] DOUBLE ROW LOW PROFILE BTS ASSY

molex MOLEX INCORPORATED

MATERIAL NO.: SEE CHART
DOCUMENT NO.: SD-38770-004
SHEET NO.: 2 OF 2
SIZE: B

THIS DRAWING CONTAINS INFORMATION THAT IS PROPRIETARY TO MOLEX INCORPORATED AND SHOULD NOT BE USED WITHOUT WRITTEN PERMISSION

Jameco Electronics
1355 Shoreway Road
Belmont, CA 94002
United States

Telephone 1-650-592-6718
Fax 1-800-237-6948
Website www.Jameco.com

Ship to:
Peter Morin
5003 Beacon Ridge RD
Lowell, IN 46356
United States

Confirmation

Page	1 of 1
Cust. Acct. #	3129126
Date	5/24/2017
Document #	
PO number	
Payment	Cash
Mode of delivery	UPS Ground

Item	Description	Ship date	Qty	Unit	Catalog price	Disc. %	Sales price	Amount
2257723	PWR SPLY,SW,ENC,150W,12V@12.5A 85-132/170-264VAC,47-63Hz,UL 150W 12V 12.5A Single Output Switchable Power Supply	5/24/2017 Meanwell LRS-150-12	2	EA	19.1000	0.00	19.1000	38.20
659454	TERM BLOCK,15A,DOUBLE ROW,8-PS LOW PROFILE,.375",6-32BH SCRE Connector Barrier Strip 8 Position 9.53mm Screw Straight Panel Mount	5/24/2017 Molex 38770-0108	4	EA	3.4900	0.00	3.4900	13.96
230990	TERMINAL BLOCK,4 POS,4-140,STD DOUBLE ROW,15AMP,5-40x3/16"SC Connector Barrier Strip 4 Position 9.53mm Screw Straight Panel Mount 15 Amp	5/24/2017 Cinch 4-140	4	EA	2.4900	0.00	2.4900	9.96

Sales subtotal amount	Charges	Net amount	Sales tax	Total
62.12	16.73	78.85	0.00	78.85

www.digikey.com
Orders 1-800-344-4539
Fax 218-681-3380

701 Brooks Ave. South, Thief River Falls, MN 56701-0677 USA

Invoice # 57806380
U.S. $

Sold To:
CUSTOMER 8915916
PETER MORIN
5003 BEACON RIDGE RD
LOWELL IN 46356-0000

Bill To:
PETER MORIN
5003 BEACON RIDGE RD
LOWELL IN 46356-0000

Terms	Invoice Date	Page
Discover	23-MAY-2017	1

Customer Purchase Order	Sales Order
	50540035

Back Orders	Account
Accepts to 17-MAY-2018	2674571

Entered By / Date	Shipped Via	Ship Date
AUTO/22-MAY-2017	PM	23-MAY-2017

Easy to Remember: 1-800-DIGI-KEY

For Office Use Only	Received	VAT/Tax ID	Billing	Pack List No.	Printing Date	Currency Type:	MSC #
	INTERNET		BILL SHIP	1	23-MAY-2017	U.S. $	0

Idx	Box	Ordered	Cancelled	Shipped	Item Number/Description	Back Order	Unit Price US $	Amount US $
1	1	10	0	10	SC1148-ND CONN PWR PLUG 2.5X5.5MM SOLDER HTSUS: 8536.69.8000 ECCN: EAR99 LEAD: LEAD FREE ROHS: ROHS COMP REACH: REACH UNAFFECTED JUN-2016 Mercury: Cert on File. For more information contact RoHS@DigiKey.com COUNTRY/ORIGIN: USA CAGE: 82389		3.68900	36.89 T
2	1	10	0	10	SC1150-ND CONN PWR JACK 2.5X5.5MM SOLDER HTSUS: 8536.69.4030 ECCN: EAR99 LEAD: LEAD FREE ROHS: ROHS COMP REACH: REACH UNAFFECTED JUN-2016 Mercury: Cert on File. For more information contact RoHS@DigiKey.com COUNTRY/ORIGIN: USA CAGE: 82389		3.37700	33.77 T
3	1	10	0	10	283-2711-ND FUSE HLDR CART 250V 20A PNL MNT HTSUS: 8538.90.8180 ECCN: EAR99 LEAD: LEAD FREE ROHS: ROHS COMP Mercury: Cert on File. For more information contact RoHS@DigiKey.com COUNTRY/ORIGIN: MEXICO		2.69300	26.93 T
4	1	10	0	10	F2512-ND FUSE GLASS 5A 250VAC 3AB 3AG HTSUS: 8536.10.0020 ECCN: EAR99 LEAD: LEAD FREE ROHS: ROHS COMP COUNTRY/ORIGIN: CHINA CAGE: 75915		.36200	3.62 T
5	1	1	0	1	CN190BR-100-ND MPPE FLT RBB BL/RD 2C 22AWG 100' HTSUS: 8544.49.3080 ECCN: EAR99 LEAD: LEAD FREE ROHS: ROHS COMP REACH: REACH UNAFFECTED DEC-2015 Mercury: Cert on File. For more information contact RoHS@DigiKey.com COUNTRY/ORIGIN: CHINA		35.03000	35.03 T
6	1	10	0	10	*1634202-5-SI-ND SWITCH ROCKER SPST 10A 125V HTSUS: 8536.50.9065 ECCN: PENDING ECCN LEAD: LEAD FREE ROHS: ROHS COMP COUNTRY/ORIGIN: CHINA PACKAGE TRACKING #: 9205590106460324927844 BOX 1 SHIPPED PM WEIGHT 2 LBS 7 OZS (1.11 KG) BOX ID 9205590106460324927844		2.36100	23.61 T

Claims for pricing errors, shortages, and defective product must be reported within 30 days of invoice date.

Contact Customer Service at 1-800-858-3616

All transactions with Digi-Key, including its subsidiaries and/or affiliates, are subject to Digi-Key's Terms of Use and Conditions of Order, available at www.digikey.com.

DUNS No: 05 760 2120 FEI No: 41-1234968 Any applicable sales tax not collected on this invoice is the responsibility of the customer.

701 Brooks Ave South,
PO Box 677
Thief River Falls, MN 56701-0677

www.digikey.com
Orders 1-800-344-4539
Fax 218-681-3380

Ship Method: PM	035/214-6	Packlist # 1
		AUTO

Sold To:
PETER MORIN
5003 BEACON RIDGE RD
LOWELL, IN 46356-0000

Ship To:
PETER MORIN
5003 BEACON RIDGE RD
LOWELL, IN 46356-0000

Sales Order: 50540035
Invoice: 57886380
Order Date: 22-May-2017
Document Date: 23-May-2017
Shippable Items: 6

THE ORDER IS COMPLETE

Ordered	Line Item	Location	Item Number/ Description	Shipped	Backordered
10	1	KF-2150	**PART:** SC1148-ND **DESC:** CONN PWR PLUG 2.5X5.5MM SOLDER **ECCN:** EAR99 **HTSUS:** 8536.69.8000 **CAGE:** 82389 LEAD FREE ROHS COMP REACH UNAFFECTED Jun-2016 **COO:** UNITED STATES **Mercury:** Cert on File. For more information contact RoHS@DigiKey.com	10	0
10	2	KA-354	**PART:** SC1150-ND **DESC:** CONN PWR JACK 2.5X5.5MM SOLDER **ECCN:** EAR99 **HTSUS:** 8536.69.4030 **CAGE:** 82389 LEAD FREE ROHS COMP REACH UNAFFECTED Jun-2016 **COO:** UNITED STATES **Mercury:** Cert on File. For more information contact RoHS@DigiKey.com	10	0
10	3	LQ-123	**PART:** 283-2711-ND **DESC:** FUSE HLDR CART 250V 20A PNL MNT **ECCN:** EAR99 **HTSUS:** 8538.90.8180 LEAD FREE ROHS COMP REACH UNKNOWN **COO:** MEXICO **Mercury:** Cert on File. For more information contact RoHS@DigiKey.com	10	0
10	4	LC-2111	**PART:** F2512-ND **DESC:** FUSE GLASS 5A 250VAC 3AB 3AG **ECCN:** EAR99 **HTSUS:** 8536.10.0020 **CAGE:** 75915 LEAD FREE ROHS COMP REACH UNKNOWN **COO:** CHINA	10	0
1	5	ZJ-2208	**PART:** CN190BR-100-ND **DESC:** MPPE FLT RBB BL/RD 2C 22AWG 100' **ECCN:** EAR99 **HTSUS:** 8544.49.3080 LEAD FREE ROHS COMP REACH UNAFFECTED Dec-2015 **COO:** CHINA **Mercury:** Cert on File. For more information contact RoHS@DigiKey.com	1	0
10	6	VN-1081	**PART:** -1634202-5-SI-ND **DESC:** SWITCH ROCKER SPST 10A 125V **ECCN:** EAR99 **HTSUS:** 8536.50.9065 LEAD FREE ROHS COMP REACH UNKNOWN **COO:** CHINA	10	0

General - WEB ORDER ID: 168956336

CERTIFICATE OF COMPLIANCE:
The Digi-Key components included in the above shipment are genuine components and were provided by the applicable manufacturer to Digi-Key. Test reports (chemical, physical, electrical, etc., together with results of any tests performed by the manufacturer) are on file (either here or in the plant of the manufacturer) and will be made available upon request. These components have been handled in accordance with the requirements of applicable quality standards. This certification is valid only to the original customer and is not transferable. Contact Customer Service at 800-858-3616 if you have any questions.

50540035, 1, 57886380

Contact Customer Service at 1-800-858-3616

All transactions with Digi-Key Electronics, including its subsidiaries and/or affiliates, are subject to Digi-Key's Terms of Use and Conditions of Order, available at www.digikey.com.

701 Brooks Ave South,
PO Box 677
Thief River Falls, MN 56701-0677

www.digikey.com
Orders 1-800-344-4539
Fax 218-681-3380

Ship Method: PM	035/214-6	Packlist # 1
		AUTO

Kim Gilbert

Kim Gilbert, Director, Customer Service

50540035, 1, 57886380

Contact Customer Service at 1-800-858-3616

All transactions with Digi-Key Electronics, including its subsidiaries and/or affiliates, are subject to Digi-Key's Terms of Use and Conditions of Order, available at www.digikey.com.

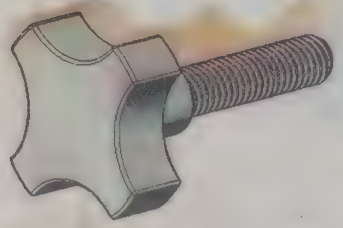

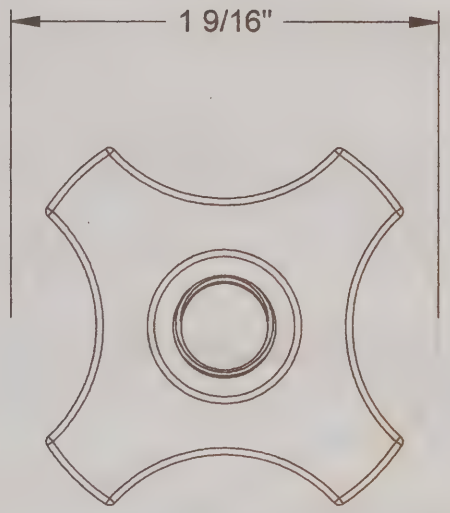

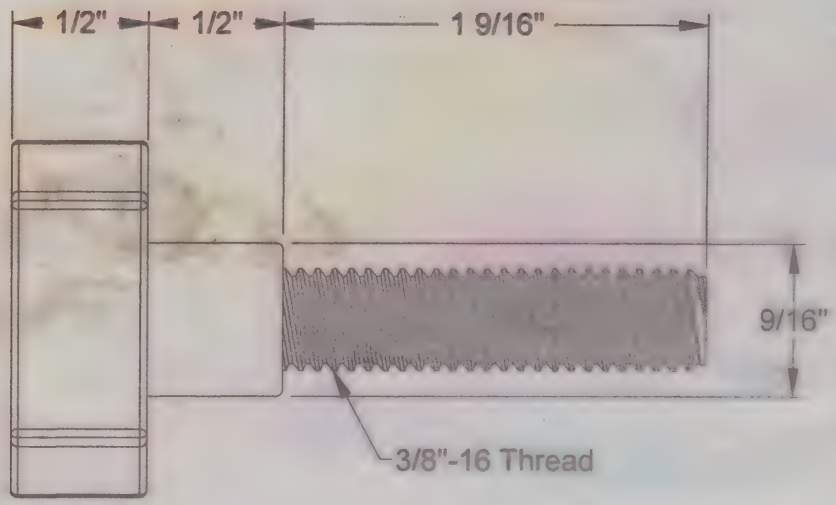

McMASTER-CARR	PART NUMBER	4384K54
© 2010 McMaster-Carr Supply Company Information in this drawing is provided for reference only	Stainless Steel Four Arm Knob with Threaded Stud	

PARKER STEEL
METRIC METALS

1819 STARR AVE
TOLEDO, OH 43605
Phone: 419.473.2481 Fax: 419.471.2655
Website: www.metricmetal.com

Shipper No. 366905

Bill To PAYDIRT PRODUCTS
5003 BEACON RIDGE ROAD
LOWELL, IN 46365

Ship To PAYDIRT PRODUCTS
5003 BEACON RIDGE ROAD
LOWELL, IN 46365

Attn: PETER MORIN 219-300-2129

Terms: CREDIT CARD

Customer P.O. Number: VERBAL PETER F.O.B.: Toledo, OH 43605 Ship Via: UPS COLLECT
Sales 1: Nate Saums Sales 2:Nate Saums Sales Order No:366905 **Due Date:** 4/27/17

Ship Qty	UM	Description	Heat	Width	Length	Weight	Location
1	P	ROUND 20MM 304/304L SS TGP -.0005"			4' 0"	6.62	
1	P	PACKAGING & HANDLING				0.01	
2			**Totals**			**6.63**	

Shipping Instructions:

Receiving Hours:
Max Bundle Weight: 0
Spacers:

Messages:

SHIP UPS COLLECT
UPS ACCT #: F38-55Y
NEEDS MIN OF 48"

Magnets

crack for tractor shots

case for telescope parts.

bungee cords

3/4" drill bit

or

20 mm

81mm Round Magnet

$7.86

Description

This extremely versatile round magnet is rated up to 95 lb. for a variety of applications around the home, shop, office or garage. The magnet features a through-hole screw and hook for special applications such as holding emergency or trouble lights on your vehicle.

- 95 lb. magnetic pull
- Through-hole screw and hook for special applications
- Stamped and formed 14 gauge sheet steel

This item can only be shipped within the 48 contiguous states via Standard Ground Shipping.

Specifications

Name	81mm Round Mag
SKU	96650
Quantity	1
Product Height	1/2 in.
Product Weight	14.4 oz.
Shipping Weight	0.55 lb.
Size(s)	81mm

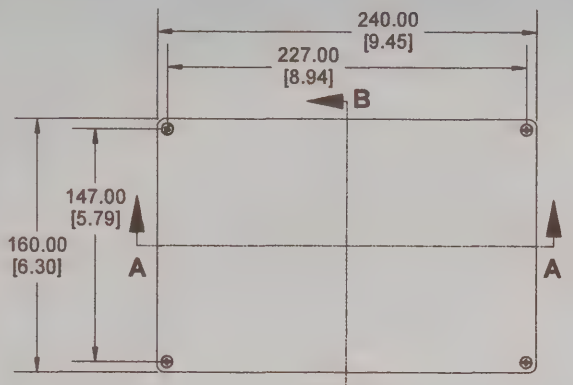

TOP VIEW

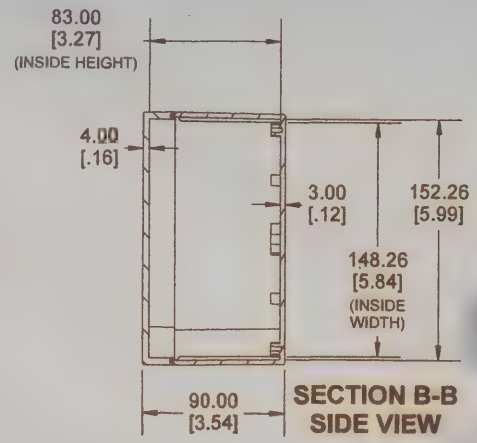

SECTION B-B
SIDE VIEW

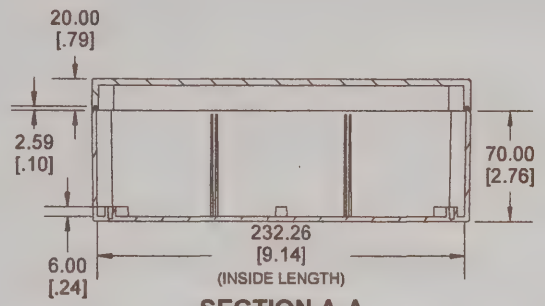

SECTION A-A
SIDE VIEW

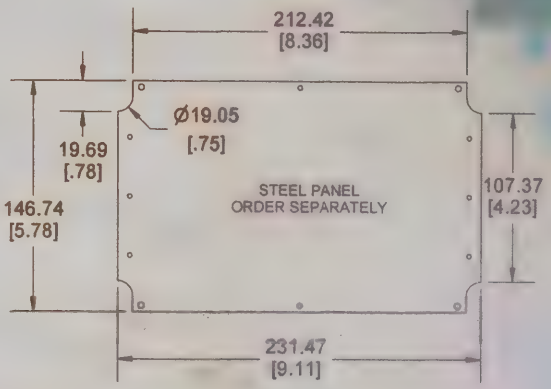

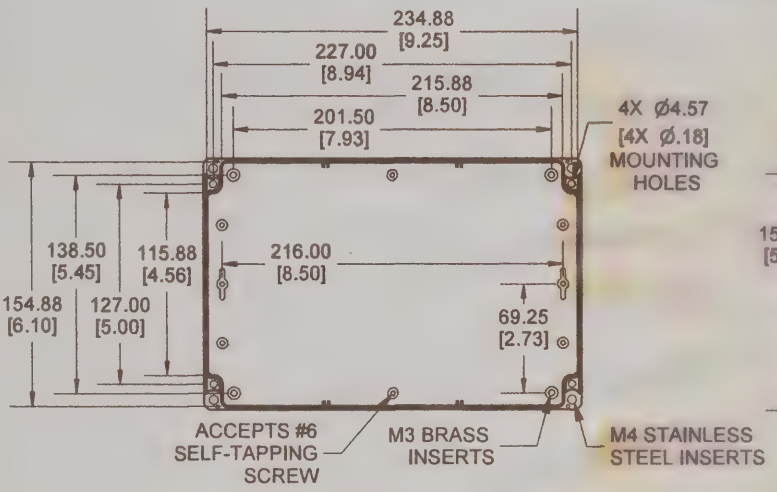

INSIDE BOX

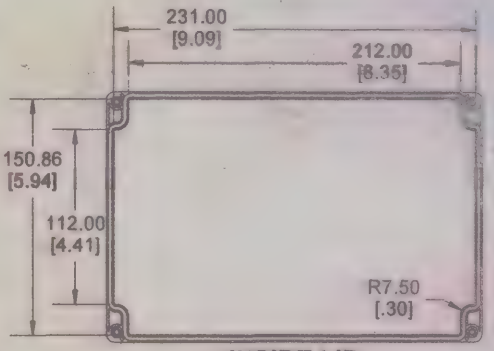

INSIDE LID

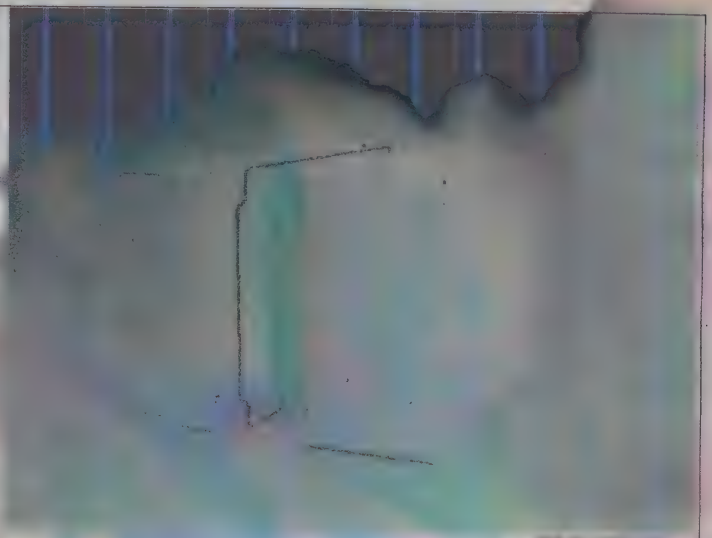

POLYCARBONATE
VERSION ONLY

US LISTED

preformed silicone gasket.
General Purpose ABS version is not UL approved. (Matl UL94 - HB)
Polycarbonate version is UL 508 approved. (Matl UL94 - 5VA @ 3mm)

1554V	
[M3 x 8mm Plate]	
Steel Panel / P.C. Board Self Tapping Screw [#6 X 1/4" (6.4mm) Plated]	1598ATS100
Cover Screws (Pkg 4) [M4 X 25mm Stainless Steel]	SC1554V
Silicone Pre-formed Gasket Black (Pkg 2)	1554VGASKET

HAMMOND
MANUFACTURING.
1554V
www.hammond[illegible].com

Dimensions:
mm
[inches]

High Performance Audio Accessories

Accesorios de audio de alto rendimiento

Audiopipe®

MADE IN CHINA / HECHO EN: CHINA

High Performance Audio Accessories

Accesorios de audio de alto rendimiento

www.AudioPipe.com

Subject: Receipt for Your May 9th Order with McMaster-Carr
From: McMaster-Carr <chi.sales@mcmaster.com>
Date: 5/10/2017 3:36 AM
To: "WA9KWS@ARRL.NET" <WA9KWS@ARRL.NET>

McMaster-Carr
630-600-3600
630-834-9427 (fax)
ch[illegible]

Receipt

Purchase Order	0509PMORIN
Paid	$34.97
Invoice	28685393
Invoice Date	5/9/17

Billed to

ATTENTION: PETER E MORIN
PETER MORIN
5003 BEACON RIDGE RD
LOWELL IN 46356

Shipped to

Peter Morin
5003 Beacon Ridge Rd
Lowell IN 46356

Information About Your Payment

Credit Card	Visa Ending- 2022
Date	5/10/17
Name on Card	Peter E Morin
Your Account	99881100

Peter Morin placed this order.

Line		Product	Ordered	Shipped	Balance	Price	Total
1	4384K54	Type 303 Stainless Steel Four-Arm Knob 3/8"-16 x 1-9/16" Long Stainless Steel Stud, 1-9/16" Diameter	2 Each	2	0	14.39 Each	28.78

Merchandise	28.78
Shipping	6.19
Total	$34.97
Payment Received 5/10/17	(34.97)
Balance Due	$0.00

Packing List	Shipped	Weight	Carrier	Tracking
2989165-01	05/09/2017	1 lb	UPS Ground	1Z8028360326990022

Federal ID 36-1458720

—logo.gif—

—Attachments:—

logo.gif	3.4 KB
Receipt 28685393.PDF	22.0 KB

Control Panel Graphic 4.pub

10.576

Need external DC IN.

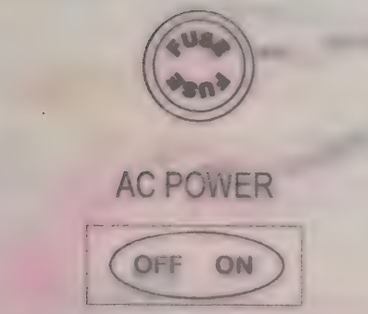

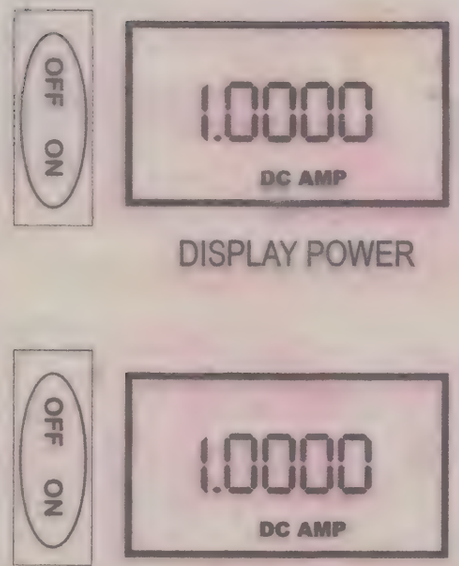

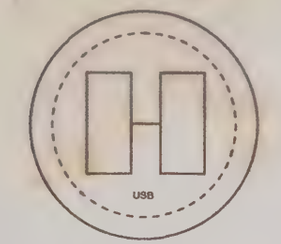

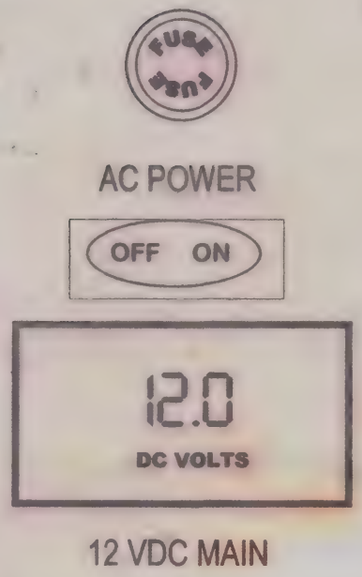

Ammeter Locations FROZEN

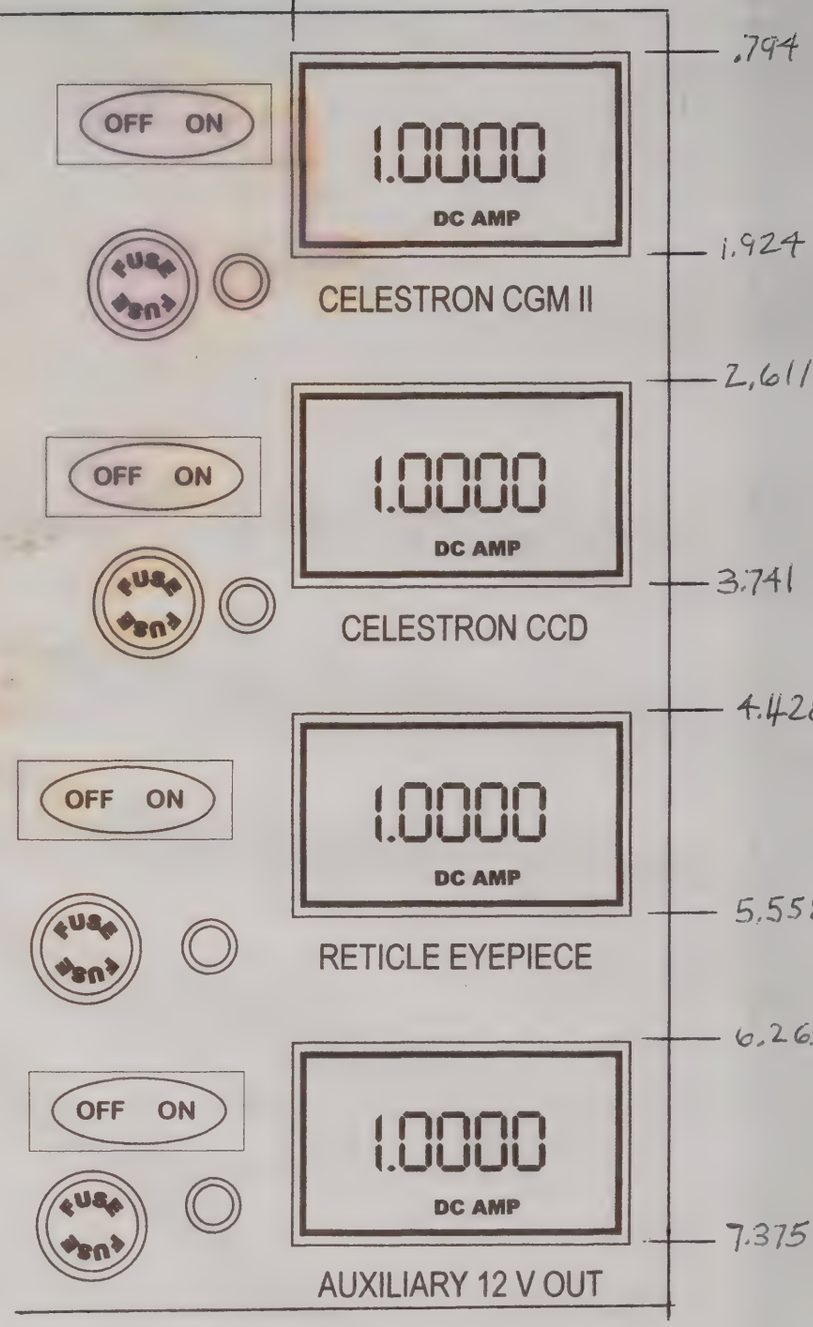

2 ADC WATT
2'00
OFF ON
VC POWER
DISPLAY POWER
1'0000
OFF ON
VC POWER
15'0
OFF ON
1'0000
OFF ON
1'0000
OFF ON
1'0000
OFF ON
1'0000

THIS DRAWING IS UNPUBLISHED | RELEASED FOR PUBLICATION 30/OCT 2003
© COPYRIGHT 2003 BY TYCO ELECTRONICS CORPORATION. ALL RIGHTS RESERVED.

LOC	DIST
E	B

REVISIONS

P	LTR	DESCRIPTION	DATE	DWN	APVD
	E	REVISED PER ECO-10-025607	21DEC10	HMR	MW

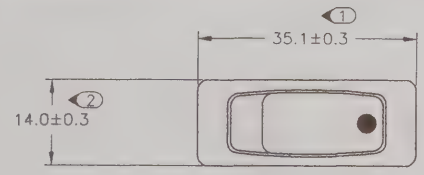

PANEL CUT OUT

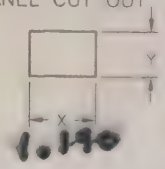

2.00-3.00	30.20	11.20
1.25-2.00	30.20	11.20
0.75-1.25	30.20	11.20
PANEL THICKNESS	X	Y

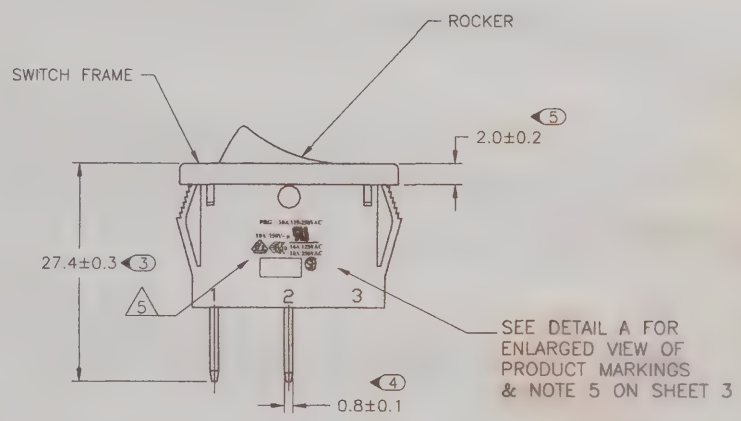

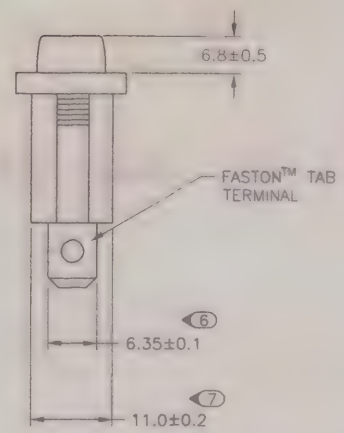

CIRCUIT DIAGRAM

PRODUCT MARKING
DETAIL A

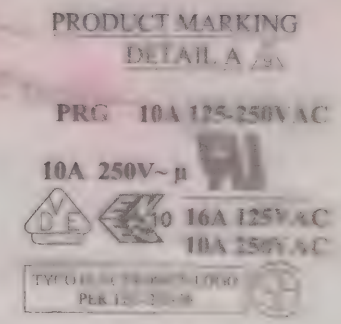

6 1634202-2 SHOWN ON-OFF

THIS DRAWING IS A CONTROLLED DOCUMENT

DIMENSIONS: MM
TOLERANCES UNLESS OTHERWISE SPECIFIED: 0 PLC ± ; 1 PLC ± 0.5 ; 2 PLC ± ; 3 PLC ± ; 4 PLC ± ; ANGLES ±
MATERIAL 1
FINISH 2

DWN S. SHACKSON 04FEB2003
CHK S. SAUTZ 04FEB2003
APVD S. SAUTZ 04FEB2003
NOT APPLICABLE
APPLICATION SPEC NOT APPLICABLE
WEIGHT
CUSTOMER DRAWING

Tyco Electronics

NAME: POWER ROCKER SWITCH, 30.2mm X 11.2mm PANEL CUT-OUT SIZE, SINGLE POLE, SINGLE THROW, NON-ILLUMINATED

SIZE A2 | CAGE CODE 0877 | DRAWING NO C-1[illegible]

AMP 1471-9 REV 31MAR2000

٥٢٤.١

701 Brooks Ave South,
PO Box 677
Thief River Falls, MN 56701-0677

www.digikey.com
Orders 1-800-344-4539
Fax 218-681-3380

Ship Method: FC	992/954-22	Packlist # 1
		AUTO

Sold To:
PETER MORIN
5003 BEACON RIDGE RD
LOWELL, IN 46356-0000

Ship To:
PETER MORIN
5003 BEACON RIDGE RD
LOWELL, IN 46356-0000

Sales Order: 50117992
Invoice: 57416609
Order Date: 17-Apr-2017
Document Date: 17-Apr-2017
Shippable Items: 2

THE ORDER IS COMPLETE

Ordered	Line Item	Location	Item Number/ Description	Shipped	Backordered
5	1	KF-2150	**PART:** SC1148-ND **DESC:** CONN PWR PLUG 2.5X5.5MM SOLDER **ECCN:** EAR99 **HTSUS:** 8536.69.8000 **CAGE:** 82389 LEAD FREE ROHS COMP REACH UNAFFECTED Jun-2016 **COO:** UNITED STATES **Mercury:** Cert on File. For more information contact RoHS@DigiKey.com	5	0
4	2	KA-354	**PART:** SC1150-ND **DESC:** CONN PWR JACK 2.5X5.5MM SOLDER **ECCN:** EAR99 **HTSUS:** 8536.69.4030 **CAGE:** 82389 LEAD FREE ROHS COMP REACH UNAFFECTED Jun-2016 **COO:** UNITED STATES **Mercury:** Cert on File. For more information contact RoHS@DigiKey.com	4	0

General - WEB ORDER ID: 167633518

CERTIFICATE OF COMPLIANCE:
The Digi-Key components included in the above shipment are genuine components and were provided by the applicable manufacturer to Digi-Key. Test reports (chemical, physical, electrical, etc., together with results of any tests performed by the manufacturer) are on file (either here or in the plant of the manufacturer) and will be made available upon request. These components have been handled in accordance with the requirements of applicable quality standards. This certification is valid only to the original customer and is not transferable. Contact Customer Service at 800-858-3616 if you have any questions.

Kim Gilbert

Kim Gilbert, Director, Customer Service

50117992, 1, 57416609

Contact Customer Service at 1-800-858-3616

All transactions with Digi-Key Electronics, including its subsidiaries and/or affiliates, are subject to Digi-Key's Terms of Use and Conditions of Order, available at www.digikey.com.

Web ID: 168956336 Access ID: 65763 Salesorder Number: 50540035 Submitted: 5/22/2017 10:49:38 PM

Shipping Address
PETER MORIN
5003 BEACON RIDGE RD
LOWELL, IN 46356-0000
USA
Email WA9KWS@ARRL.NET
Telephone 2193002129

Billing Address
PETER MORIN
5003 BEACON RIDGE RD
LOWELL , IN 46356-0000
USA

Shipping Method United States Postal Service Priority Mail
Customer Number 8915916

Payment Method Discover
Purchase Order

All prices are in USD.

Index	Quantity	Part Number	Manufacturer Part Number	Description	Customer Reference	Available Quantity	Backorder Quantity	Unit Price	Extended Price
1	10	SC1148-ND	761K	CONN PWR PLUG 2.5X5.5MM SOLDER		10 Immediate	0	3.68900	$36.89
2	10	SC1150-ND	L712A	CONN PWR JACK 2.5X5.5MM SOLDER		10 Immediate	0	3.37700	$33.77
3	10	283-2711-ND	BK/HTB-24I-R	FUSE HLDR CART 250V 20A PNL MNT		10 Immediate	0	2.69300	$26.93
4	10	F2512-ND	0312005.HXP	FUSE GLASS 5A 250VAC 3AB 3AG		10 Immediate	0	0.36200	$3.62
5	1	CN190BR-100-ND	21456-22-2-0000-0104-1-TS	MPPE FLT RBB BL/RD 2C 22AWG 100'		1 Immediate	0	35.03000	$35.03
6	10	1634202-5-ND	1634202-5	SWITCH ROCKER SPST 10A 125V		10 Immediate	0	2.36100	$23.61

Subtotal	$159.85
Shipping	Estimate
Sales Tax	$11.19
Total	unknown

Fields marked as unknown cannot be determined at this time.

Applicable taxes will be added to your order at submit time unless you have a tax exempt certificate on file with us.
All duties and taxes are the responsibility of the customer.
These commodities, technology or software will be exported from the United States in accordance with the Export Administration regulation. These products may not be re-exported, diverted, or otherwise shipped to another destination that does not fully comply with U.S. laws and the laws of any other applicable jurisdiction.
Note: If your package is of excessive weight and size, someone will contact you prior to shipping and notify you of shipping costs. Shipping charges will be prepaid and added to your order.

Order Notes:

COMMIT LANGUAGE: ENGLISH

L

13360 West 185th Avenue, Lowell, IN 46356, United States
Rebuilding & Repairing

Enpr

Munster, IN
235 45th Avenue, Munster, IN 46321, United States
Rebuilding & Repairing

Auten S

Merrillville, IN
510 East 86th Avenue, Merrillville, IN 46410, United States
Machine Shops

Caliber Mold & M

Bob 219 696-5436

Lowell, IN
790 West Commercial Avenue # C, Lowell, IN 46356, United States
Machine Shops

Illiana Grinding

Merrillville, IN
5341 Broadway, Merrillville, IN 46410, United States
Machine Shops

All Source Equipment & Svc

Lake Station, IN
2493 Ripley Street, Lake Station, IN 46405, United States
Rebuilding & Repairing

Scott Machine & Fabricating

disconnected

Lowell, IN
1450 West 180th Lane, Lowell, IN 46356, United States
Machine Shops

Cope Brothers Machine Inc

Leroy, IN
5301 East US Route 231, Leroy, IN 46355, United States
Machine Shops

disconnected

9810 Belshaw Road # 2, Lowell, IN 46356, United States
Machine Shops

disconnected

4505 West 163rd Pl, Lowell, IN 46356, United States
Machine Shops

Gary

4001 West 53rd Avenue, Merrillville, IN 46410, United States
Machinery-New

Nector M

Schererville
595 Kennedy Avenue, Schererville, IN 46375, United States
Machine Shops

Star Machine Re

Schererville, IN
2217 Red River Drive, Schererville, IN 46375, United States
Rebuilding & Repairing

Nichols Manufacturing Co

Lowell, IN
1610 West 203rd Avenue, Lowell, IN 46356, United States
Miscellaneous

2 Amigos Auto Rebuilders

Whiting, IN
1454 Indianapolis Boulevard, Whiting, IN 46394, United States
Engines-Rebuilding & Exchanging

RAR Machine & Mfg Inc

American Grinding

Schererville, IN
1231 Commercial Drive, Schererville, IN 46375, United States
Machine Shops

www.digikey.com
Orders 1-800-344-4539
Fax 218-681-3380

701 Brooks Ave. South, Thief River Falls, MN 56701-0677 USA

Invoice # 57886380
U.S. $

Sold To:
PETER MORIN
5003 BEACON RIDGE RD
LOWELL IN 46356-0000

CUSTOMER 8915916

Terms	Invoice Date	
Discover	23-MAY-2017	2
Customer Purchase Order	Shipped Via	
	PM	

Easy to Remember:
1-800-DIGI-KEY

Idx	Box	Ordered	Cancelled	Shipped	Item Number/Description	Back Order	Unit Price US $	Amount US $
					TOTAL INVOICED			[illegible]
					SHIPPING CHARGES APPLIED			[illegible]
					** CHARGES SUBTOTAL **			[illegible]
					SALES TAX			[illegible]
					(T INDICATES TAXABLE AMOUNTS)			
					TOTAL CHARGED TO CREDIT CARD			[illegible]
								U.S. [illegible]
					YOUR CREDIT CARD HAS BEEN CHARGED THE ABOVE INDICATED AMOUNT			
					THE ORDER IS COMPLETE			
					*CERTAIN ORDER QUANTITIES MAY APPEAR AS TWO LINE ITEMS AS A RESULT OF MULTIPLE LOCATIONS IN THE WAREHOUSE			
				Ship To:	PETER MORIN 5003 BEACON RIDGE RD LOWELL IN 46356-0000			
				Ship From:	DIGI-KEY 701 BROOKS AVE. SOUTH P.O. BOX 677 THIEF RIVER FALLS MN 56701-0677			
				General -	WEB ORDER ID: 168956336 *NOTE: ONE OR MORE ITEMS ON THIS ORDER ARE CONTROLLED FOR EXPORT.			
					These items are controlled by the U.S. Government and authorized for export only to the country of ultimate destination for use by the ultimate consignee or end-user(s) herein identified. They may not be resold, transferred, or otherwise disposed of, to any other country or to any person other than the authorized ultimate consignee or end-user(s), either in their original form or after being incorporated into other items, without first obtaining approval from the U.S. Government or as otherwise authorized by U.S. law and regulations.			
				CERTIFICATE OF COMPLIANCE:	The Digi-Key components included in the above shipment are genuine components and were provided by the applicable manufacturer to Digi-Key. Test reports (chemical, physical, electrical, etc., together with results of any tests performed by the manufacturer) are on file (either here or in the plant of the manufacturer) and will be made available upon request. These components have been handled in accordance with the requirements of applicable quality standards. This certification is valid only to the original customer and is not transferable. Contact Customer Service at 800-858-3616 if you have any questions. Kim Gilbert Kim Gilbert, Director, Customer Service			

Claims for pricing errors, shortages, and defective product must be reported within 30 days of invoice date.

Contact Customer Service at 1-800-858-3616

All transactions with Digi-Key, including its subsidiaries and/or affiliates, are subject to Digi-Key's Terms of Use and Conditions of Order, available at www.digikey.com.

DUNS No: 05 760 2120 FEI No: 41-1234968 Any applicable sales tax not collected on this invoice is the responsibility of the customer.

PouchDirect

Thank you Peter Morin!

Your order number is 374602

An email will be sent containing information about your purchase. If you have any questions about your purchase, email us at , or call us at .

Your account has b

4 Items

Show Details

$51.92

4.9 ★★★★★

Google

Customer Reviews

ACTIVITIES

Year	Month	Sun	Mon	Tue	Wed	Thu	Fri	Sat
	/							

Notes & Delegation	B	A	▼ Description/Objectives ▼	Ref.	Time Required A	Time Required B
◀ Messages ▶						
			▼ Outside Activities and Due From Others ▼	A & B Time		
◀ Outside Activities ▶						
				Outside Time		
Due From Others						

© 1997 Priority Management Systems Inc.
Item # PJ0131

Ref.: CP, C/N, PP, MP, FAX, E-MAIL, FILE, KRP, etc.

PLAN

A.M.	Appointments/Schedule	Outcome/Expenses
12 00		
to		
6 00		
15		
30		
45		
7 00		
15		
30		
45		
8 00		
15		
30		
45		
9 00		
15		
30		
45		
10 00		
15		
30		
45		
11 00		
15		
30		
45		

Results/Achievements/Notes

P.M.	Appointments/Schedule	Outcome/Expenses
12 00		
15		
30		
45		
1 00		
15		
30		
45		
2 00		
15		
30		
45		
3 00		
15		
30		
45		
4 00		
15		
30		
45		
5 00		
15		
30		
45		
6 00		
15		
30		
45		
7 00		
30		
8 00		
30		
9 00		
30		
10 00		
30		
11 00		
30		

© 1997 Priority Management Systems Inc.

ACTIVITIES

Year / Month | Sun | Mon | Tue | Wed | Thu | Fri | Sat

Notes & Delegation	B	A	▼ Description/Objectives ▼	Ref.	Time Required A	Time Required B
◀ Messages ▶						
			▼ Outside Activities and Due From Others ▼		A & B Time	
◀ Outside Activities ▶						
					Outside Time	
Due From Others						

© 1997 Priority Management Systems Inc.
Item # PJ0131

Ref.: CP, C/N, PP, MP, FAX, E-MAIL, FILE, KRP, etc.

PLAN

A.M.	Appointments/Schedule	Outcome/Expenses
12 00		
to		
6 00		
15		
30		
45		
7 00		
15		
30		
45		
8 00		
15		
30		
45		
9 00		
15		
30		
45		
10 00		
15		
30		
45		
11 00		
15		
30		
45		

Results/Achievements/Notes

P.M.	Appointments/Schedule	Outcome/Expenses
12 00		
15		
30		
45		
1 00		
15		
30		
45		
2 00		
15		
30		
45		
3 00		
15		
30		
45		
4 00		
15		
30		
45		
5 00		
15		
30		
45		
6 00		
15		
30		
45		
7 00		
30		
8 00		
30		
9 00		
30		
10 00		
30		
11 00		
30		

© 1997 Priority Management Systems Inc.

ACTIVITIES

Year	Month	Sun	Mon	Tue	Wed	Thu	Fri	Sat
	/							

Notes & Delegation	B	A	▼ Description/Objectives ▼	Ref	Time Required A	Time Required B
◀ Messages ▶						
			▼ Outside Activities and Due From Others ▼	A & B Time		
◀ Outside Activities ▶						
				Outside Time		
Due From Others						

© 1997 Priority Management Systems Inc.
Item # PJ0131

Ref.: CP, C/N, PP, MP, FAX, E-MAIL, FILE, KRP, etc.

PLAN

A.M.	Appointments/Schedule	Outcome/Expenses
12 00 to		
6 00 15 30 45		
7 00 15 30 45		
8 00 15 30 45		
9 00 15 30 45		
10 00 15 30 45		
11 00 15 30 45		

Results/Achievements/Notes

P.M.	Appointments/Schedule	Outcome/Expenses
12 00 15 30 45		
1 00 15 30 45		
2 00 15 30 45		
3 00 15 30 45		
4 00 15 30 45		
5 00 15 30 45		
6 00 15 30 45		
7 00 30		
8 00 30		
9 00 30		
10 00 30		
11 00 30		

© 1997 Priority Management Systems Inc.

ACTIVITIES

Year / Month | Sun | Mon | Tue | Wed | Thu | Fri | Sat

Notes & Delegation	B	A	▼ Description/Objectives ▼	Ref.	Time Required A	Time Required B

◄ Messages ►

▼ Outside Activities and Due From Others ▼ A & B Time

◄ Outside Activities ►

Outside Time

Due From Others

© 1997 Priority Management Systems Inc.
Item # PJ0131

Ref.: CP, C/N, PP, MP, FAX, E-MAIL, FILE, KRP, etc.

PLAN

A.M.	Appointments/Schedule	Outcome/Expenses
12 00 to		
6 00 15 30 45		
7 00 15 30 45		
8 00 15 30 45		
9 00 15 30 45		
10 00 15 30 45		
11 00 15 30 45		

P.M.	Appointments/Schedule	Outcome/Expenses
12 00 15 30 45		
1 00 15 30 45		
2 00 15 30 45		
3 00 15 30 45		
4 00 15 30 45		
5 00 15 30 45		
6 00 15 30 45		
7 00 30		
8 00 30		
9 00 30		
10 00 30		
11 00 30		

Results/Achievements/Notes

© 1997 Priority Management Systems Inc.

ACTIVITIES

Year Month Sun Mon Tue Wed Thu Fri Sat

/

Notes & Delegation	B	A	▼ Description/Objectives ▼	Ref.	Time Required A	B

◄ Messages ►

▼ Outside Activities and Due From Others ▼ A & B Time

◄ Outside Activities ►

Outside Time

Due From Others

© 1997 Priority Management Systems Inc.
Item # PJ0131

Ref.: CP, C/N, PP, MP, FAX, E-MAIL, FILE, KRP, etc.

PLAN

A.M.	Appointments/Schedule	Outcome/Expenses
12 00 to		
6 00 15 30 45		
7 00 15 30 45		
8 00 15 30 45		
9 00 15 30 45		
10 00 15 30 45		
11 00 15 30 45		

P.M.	Appointments/Schedule	Outcome/Expenses
12 00 15 30 45		
1 00 15 30 45		
2 00 15 30 45		
3 00 15 30 45		
4 00 15 30 45		
5 00 15 30 45		
6 00 15 30 45		
7 00 30		
8 00 30		
9 00 30		
10 00 30		
11 00 30		

Results/Achievements/Notes

© 1997 Priority Management Systems Inc.

ACTIVITIES

Year / Month | Sun | Mon | Tue | Wed | Thu | Fri | Sat

Notes & Delegation	B	A	▼ Description/Objectives ▼	Ref	Time Received A	Time Received B
◀ Messages ▶						
			▼ Outside Activities and Due From Others ▼		A & B Time	
◀ Outside Activities ▶						
					Outside Time	
Due From Others						

© 1997 Priority Management Systems Inc.
Item # PJ0131

Ref.: CP, C/N, PP, MP, FAX, E-MAIL, FILE, KRP, etc.

PLAN

A.M.	Appointments/Schedule	Outcome/Expenses
12 00		
to		
6 00		
15		
30		
45		
7 00		
15		
30		
45		
8 00		
15		
30		
45		
9 00		
15		
30		
45		
10 00		
15		
30		
45		
11 00		
15		
30		
45		

Results/Achievements/Notes

P.M.	Appointments/Schedule	Outcome/Expenses
12 00		
15		
30		
45		
1 00		
15		
30		
45		
2 00		
15		
30		
45		
3 00		
15		
30		
45		
4 00		
15		
30		
45		
5 00		
15		
30		
45		
6 00		
15		
30		
45		
7 00		
30		
8 00		
30		
9 00		
30		
10 00		
30		
11 00		
30		

© 1997 Priority Management Systems Inc.

ACTIVITIES

Year	Month	Sun	Mon	Tue	Wed	Thu	Fri	Sat
	/							

Notes & Delegation	B	A	▼ Description/Objectives ▼	Ref	Time Required A	Time Required B
▲ Messages ▲						
			▼ Outside Activities and Due From Others ▼	A & B Time		
▲ Outside Activities ▲						
				Outside Time		
Due From Others						

© 1997 Priority Management Systems Inc.
Item # PJ0131

Ref.: CP, C/N, PP, MP, FAX, E-MAIL, FILE, KRP, etc.

PLAN

A.M.	Appointments/Schedule	Outcome/Expenses
12 00 to		
6 00 15 30 45		
7 00 15 30 45		
8 00 15 30 45		
9 00 15 30 45		
10 00 15 30 45		
11 00 15 30 45		

P.M.	Appointments/Schedule	Outcome/Expenses
12 00 15 30 45		
1 00 15 30 45		
2 00 15 30 45		
3 00 15 30 45		
4 00 15 30 45		
5 00 15 30 45		
6 00 15 30 45		
7 00 30		
8 00 30		
9 00 30		
10 00 30		
11 00 30		

Results/Achievements/Notes

© 1997 Priority Management Systems Inc.

ACTIVITIES

Year / Month Sun Mon Tue Wed Thu Fri Sat

Notes & Delegation	B	A	▼ Description/Objectives ▼	Ref.	Time Required A	Time Required B
▲ Messages ▲						
			▼ Outside Activities and Due From Others ▼	A & B Time		
▲ Outside Activities ▲						
				Outside Time		
Due From Others						

© 1997 Priority Management Systems Inc.
Item # PJ0131

Ref.: CP, C/N, PP, MP, FAX, E-MAIL, FILE, KRP, etc.

PLAN

A.M.	Appointments/Schedule	Outcome/Expenses
12 00 to		
6 00 15 30 45		
7 00 15 30 45		
8 00 15 30 45		
9 00 15 30 45		
10 00 15 30 45		
11 00 15 30 45		

Results/Achievements/Notes

P.M.	Appointments/Schedule	Outcome/Expenses
12 00 15 30 45		
1 00 15 30 45		
2 00 15 30 45		
3 00 15 30 45		
4 00 15 30 45		
5 00 15 30 45		
6 00 15 30 45		
7 00 30		
8 00 30		
9 00 30		
10 00 30		
11 00 30		

© 1997 Priority Management Systems Inc.

ACTIVITIES

Year / Month	Sun	Mon	Tue	Wed	Thu	Fri	Sat
/							

Notes & Delegation	B	A	▼ Description/Objectives ▼	Ref.	Time Required A	Time Required B
◀ Messages ▶						
			▼ Outside Activities and Due From Others ▼	A & B Time		
◀ Outside Activities ▶						
				Outside Time		
Due From Others						

© 1997 Priority Management Systems Inc.
Item # PJ0131

Ref.: CP, C/N, PP, MP, FAX, E-MAIL, FILE, KRP, etc.

PLAN

A.M.	Appointments/Schedule	Outcome/Expenses
12 00 to		
6 00 15 30 45		
7 00 15 30 45		
8 00 15 30 45		
9 00 15 30 45		
10 00 15 30 45		
11 00 15 30 45		

Results/Achievements/Notes

P.M.	Appointments/Schedule	Outcome/Expenses
12 00 15 30 45		
1 00 15 30 45		
2 00 15 30 45		
3 00 15 30 45		
4 00 15 30 45		
5 00 15 30 45		
6 00 15 30 45		
7 00 30		
8 00 30		
9 00 30		
10 00 30		
11 00 30		

© 1997 Priority Management Systems Inc.

ACTIVITIES

Year	Month	Sun	Mon	Tue	Wed	Thu	Fri	Sat
	/							

Notes & Delegation	B	A	▼ Description/Objectives ▼	Ref	Time Required A	Time Required B
◀ Messages ▶						
			▼ Outside Activities and Due From Others ▼	A & B Time		
◀ Outside Activities ▶						
				Outside Time		
Due From Others						

© 1997 Priority Management Systems Inc.
Item # PJ0131

Ref.: CP, C/N, PP, MP, FAX, E-MAIL, FILE, KRP, etc.

PLAN

A.M.	Appointments/Schedule	Outcome/Expenses
12 00 to		
6 00 15 30 45		
7 00 15 30 45		
8 00 15 30 45		
9 00 15 30 45		
10 00 15 30 45		
11 00 15 30 45		

P.M.	Appointments/Schedule	Outcome/Expenses
12 00 15 30 45		
1 00 15 30 45		
2 00 15 30 45		
3 00 15 30 45		
4 00 15 30 45		
5 00 15 30 45		
6 00 15 30 45		
7 00 30		
8 00 30		
9 00 30		
10 00 30		
11 00 30		

Results/Achievements/Notes

© 1997 Priority Management Systems Inc.

ACTIVITIES

Year / Month | Sun | Mon | Tue | Wed | Thu | Fri | Sat

Notes & Delegation	B	A	▼ Description/Objectives ▼	Ref	Time Required A	Time Required B
◀ Messages ▶						
			▼ Outside Activities and Due From Others ▼	A & B Time		
◀ Outside Activities ▶						
				Outside Time		
Due From Others						

© 1997 Priority Management Systems Inc
Item # PJ0131

Ref CP, C/N, PP, MP, FAX, E-MAIL, FILE KRP etc

PLAN

A.M.	Appointments/Schedule	Outcome/Expenses
12 00 to		
6 00 15 30 45		
7 00 15 30 45		
8 00 15 30 45		
9 00 15 30 45		
10 00 15 30 45		
11 00 15 30 45		

Results/Achievements/Notes

P.M.	Appointments/Schedule	Outcome/Expenses
12 00 15 30 45		
1 00 15 30 45		
2 00 15 30 45		
3 00 15 30 45		
4 00 15 30 45		
5 00 15 30 45		
6 00 15 30 45		
7 00 30		
8 00 30		
9 00 30		
10 00 30		
11 00 30		

© 1997 Priority Management Systems Inc.

ACTIVITIES

Year	Month	Sun	Mon	Tue	Wed	Thu	Fri	Sat
/								

Notes & Delegation	B	A	▼ Description/Objectives ▼	Ref.	Time Required A	Time Required B
◀ Messages ▶						
			▼ Outside Activities and Due From Others ▼	A & B Time		
◀ Outside Activities ▶						
				Outside Time		
Due From Others						

© 1997 Priority Management Systems Inc.
Item # PJ0131

Ref.: CP, C/N, PP, MP, FAX, E-MAIL, FILE, KRP, etc.

PLAN

A.M.	Appointments/Schedule	Outcome/Expenses
12 00 to 6 00		
15		
30		
45		
7 00		
15		
30		
45		
8 00		
15		
30		
45		
9 00		
15		
30		
45		
10 00		
15		
30		
45		
11 00		
15		
30		
45		

Results/Achievements/Notes

P.M.	Appointments/Schedule	Outcome/Expenses
12 00		
15		
30		
45		
1 00		
15		
30		
45		
2 00		
15		
30		
45		
3 00		
15		
30		
45		
4 00		
15		
30		
45		
5 00		
15		
30		
45		
6 00		
15		
30		
45		
7 00		
30		
8 00		
30		
9 00		
30		
10 00		
30		
11 00		
30		

© 1997 Priority Management Systems Inc.

ACTIVITIES

Year	Month	Sun	Mon	Tue	Wed	Thu	Fri	Sat
	/							

Notes & Delegation	B	A	▼ Description/Objectives ▼	Ref	Time Required A	Time Required B
◀ Messages ▶						
			▼ Outside Activities and Due From Others ▼	A & B Time		
◀ Outside Activities ▶						
				Outside Time		
Due From Others						

© 1997 Priority Management Systems Inc.
Item # PJ0131

Ref.: CP, C/N, PP, MP, FAX, E-MAIL, FILE, KRP, etc.

PLAN

A.M.	Appointments/Schedule	Outcome/Expenses
12 00 to		
6 00 15 30 45		
7 00 15 30 45		
8 00 15 30 45		
9 00 15 30 45		
10 00 15 30 45		
11 00 15 30 45		

P.M.	Appointments/Schedule	Outcome/Expenses
12 00 15 30 45		
1 00 15 30 45		
2 00 15 30 45		
3 00 15 30 45		
4 00 15 30 45		
5 00 15 30 45		
6 00 15 30 45		
7 00 30		
8 00 30		
9 00 30		
10 00 30		
11 00 30		

Results/Achievements/Notes

© 1997 Priority Management Systems Inc.

ACTIVITIES

Year / Month Sun Mon Tue Wed Thu Fri Sat

Notes & Delegation	B	A	▼ Description/Objectives ▼	Ref.	Time Required A	B

◄ Messages ►

▼ Outside Activities and Due From Others ▼	A & B Time	

◄ Outside Activities ►

Outside Time

Due From Others

© 1997 Priority Management Systems Inc.
Item # PJ0131

Ref.: CP, C/N, PP, MP, FAX, E-MAIL, FILE, KRP, etc.

PLAN

A.M.	Appointments/Schedule	Outcome/Expenses
12 00 to		
6 00 15 30 45		
7 00 15 30 45		
8 00 15 30 45		
9 00 15 30 45		
10 00 15 30 45		
11 00 15 30 45		

Results/Achievements/Notes

P.M.	Appointments/Schedule	Outcome/Expenses
12 00 15 30 45		
1 00 15 30 45		
2 00 15 30 45		
3 00 15 30 45		
4 00 15 30 45		
5 00 15 30 45		
6 00 15 30 45		
7 00 30		
8 00 30		
9 00 30		
10 00 30		
11 00 30		

© 1997 Priority Management Systems Inc.

520							
530							
540	WRRD	Jackson/Milwaukee					
550	KTRS	St Loius	MO				
560	WIND	Chicago	IL				
570							
580							
590							
600							
610							
620							
630							
640							
650							
660							
670							
680							
690							
700							
710							
720							
730							
740							
750							
760							
770							
780							
790							
800							
810							
820							
830							
840							
850							
860							
870							
880							
890	WLS	Chicago	IL				
900							
910							
920							
930							
940							
950							
960							
970							
980							
990							
1000	WMYP	Chicago	IL				
1010							
1020	WPEO	Peoria	IL				
1030	WNVR	Chicago	IL				
1040	WHO	Des Moines	IA				
1050	WDZ	Decatur	IL	882 area code?			
1060							
1070							
1080							

1090							
1100							
1110							
1120							
1130							
1140							
1150							
1160							
1170							
1180							
1190							
1200							
1210							
1220							
1230							
1240							
1250							
1260							
1270							
1280							
1290							
1300							
1310							
1320							
1330							
1340							
1350							
1360							
1370							
1380							
1390							
1400							
1410							
1420							
1430							
1440							
1450							
1460							
1470							
1480							
1490							
1500							
1510							
1520							
1530							
1540							
1550							
1560							
1570							
1580							
1590							
1600							
1610							
1620							
1630							
1640							
1650							